WIRELESS VALVE LINK (WVL)
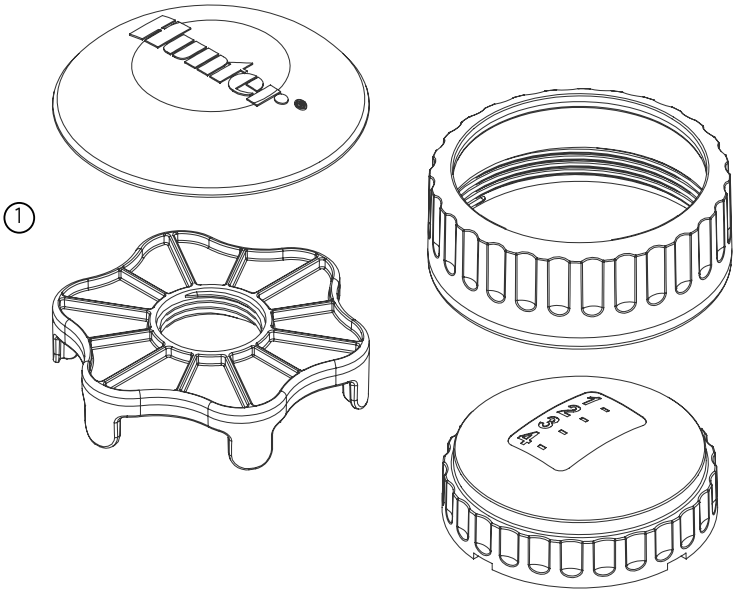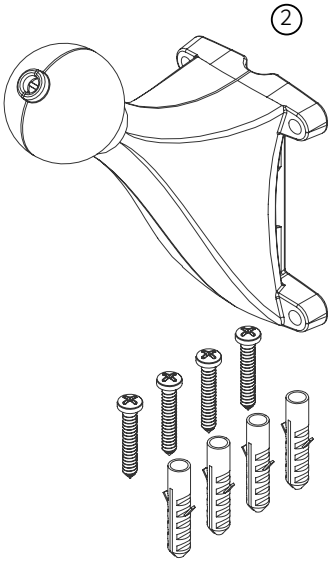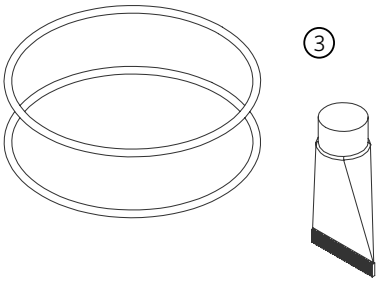
ITEM	DESCRIPTION	CATALOG NO.
1	Spare Plastic Parts Kit, WVL	10046600SP
2	Spare Ball Mount, RPT, SP-WVL, SP-NODEBT	10046700SP
3	Spare O-Ring Kit, WVL	10059400SP